TROX® TECHNIK
The art of handling air

TCB-RB

PASSIVE CHILLED BEAM IN NOMINAL LENGTHS OF UP TO 4500 MM AND WITH A HORIZONTAL HEAT EXCHANGER

Passive chilled beam with 2-pipe heat exchanger for ceiling installation either within a ceiling void or can be freely suspended.

- Beams can be supplied in various lengths from 1200 mm up to 4500 mm in 100 mm increments
- For room heights from 2.60 m.
- Suitable for mounting within a ceiling void above a perforated ceiling tile or can be freely suspended
- Comfortable room cooling, offering low investment costs ideal for refurbishment or new build projects
- Absence of moving parts offers a silent, low maintenance cooling solution

Optional equipment and accessories:

- Flexible skirt to provide directional control of discharge air
- Standard casing surface finish of TCB unit is black (RAL 9005) powder coat. Other RAL CLASSIC colours are available on request

Application

Application

- Passive chilled beam Type TCB-RB for ceiling installation, either freely suspended or above an open cell ceiling, suitable for room heights from 2.60 m
- Dissipation of high heat loads using a 2-pipe heat exchanger
- Energy-efficient solution since water is used as the medium for cooling
- Passive chilled beam (no supply air) for new buildings and refurbishment projects

Special characteristics

- Air-water component for the dissipation of heat loads
- Horizontal heat exchanger as 2-pipe system
- Water connections at the narrow side, Ø15 mm copper pipe, with plain tails, either horizontal or 90° vertical.

Nominal sizes

- Nominal length: 1200 to 4500 mm in 100 mm increments
- Nominal width: 250, 300, 350, 400, 450, 500, 550, 600 mm

- Height: 200, 250, 300 mm

Description

Variants

- TCB-RB-UK-0: No skirt
- TCB-RB-UK-S: with skirt fitted

Construction and materials

- TCB-RB passive chilled beam comprises a cooling coil and casing, with return edges, which provide mounting points suitable for Ø 8mm drop rods or suitable wire support
- Casing is galvanised steel sheet, cooling coil manufactured from high grade copper pipework with self-finish aluminium fins
- Standard casing surface finish of TCB-RB units is black (RAL 9005) powder coat with coil natural fin (black coil optional). Other RAL CLASSIC colours are available on request for unit casing
- The black flexible skirt is made from high quality plasticised PVC polymer directly coated onto both sides of a polyester substrate
- The TCB-RB skirt is only available in black
- The PVC skirt is mechanically fixed to the bottom of the casing providing directional control of discharge air through the ceiling into the occupied zone

Attachment

- PVC Skirt

Useful additions

- Connecting hoses

Maintenance

- No moving parts, hence low maintenance
- The heat exchanger can be vacuumed with a vacuum cleaner if necessary

TECHNICAL INFORMATION

Function, Technical data, Quick sizing, Specification text, Order code

Functional description

Passive chilled beams are used to dissipate high heat loads.

Warm room air rises due to thermal buoyancy, is cooled by the heat exchanger, then slowly flows downwards again to the occupied zone.

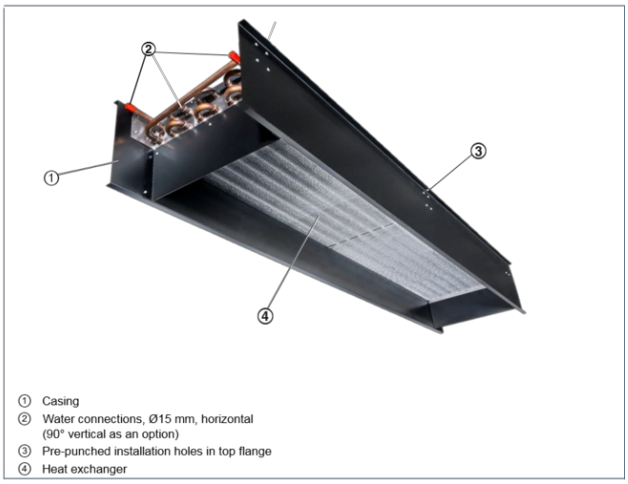

Length	1200 to 4500 mm in 100 mm increments
Nominal width	250, 300, 350, 400, 450, 500, 550, 600 mm
Height	200, 250, 300 mm
Cooling capacity	Refer to tables
Max. operating pressure, water side	15 bar

Quick sizing - Single row coil

Quick sizing – nominal cooling capacity [W] to EN 14518

Length (L_1)	Coil Width (B)	Height	Ut_{Wm-Raf} = 8 K; Ut_{W} = 2 K		
			Distance to ceiling		
			100 mm	200 mm	300 mm
mm			W		
1200	250	200	87	94	94
		250	104	111	111
		300	120	127	127
1500		200	145	153	153
		250	166	175	177
		300	186	196	196
2000		200	240	251	252
		250	269	281	282
		300	295	308	309
2500		200	333	347	348
		250	369	385	386
		300	402	418	419
3000		200	433	442	443
		250	469	487	488
		300	508	528	529
1200	400	200	185	209	214
		250	208	233	238
		300	227	255	260
1500		200	269	299	305
		250	297	330	336
		300	323	357	364
2000		200	406	447	455
		250	444	488	497
		300	479	525	534
2500		200	542	593	603
		250	590	645	656
		300	633	692	703
3000		200	677	739	751
		250	735	802	814
		300	787	858	871
1200	550	200	239	279	291
		250	266	309	322
		300	290	336	350
1500		200	337	388	404
		250	371	426	442
		300	401	460	477
2000		200	498	567	588
		250	544	618	641
		300	585	644	668
2500		200	657	745	771
		250	715	810	838
		300	767	868	897
3000		200	816	924	953
		250	886	1000	1034
		300	949	1070	1106

Note:
- Free area of perforation underneath the beam: 50%

Passive chilled beam, Type TCB, with 2-pipe heat exchanger for ceiling installation either within a ceiling void or can be freely suspended.

Special characteristics

- Air-water component for the dissipation of heat loads
- Horizontal heat exchanger as 2-pipe system
- Water connections at the narrow side, Ø15 mm copper pipe, with plain tails, either horizontal or 90° vertical.

Materials and construction

- TCB-RB passive chilled beam comprises a cooling coil and casing, with return edges, which provide mounting points suitable for Ø 8mm drop rods or suitable wire support
- Casing is galvanised steel sheet, cooling coil manufactured from high grade copper pipework with self-finish aluminium fins
- Standard casing surface finish of TCB-RB units is black (RAL 9005) powder coat with coil natural fin (black coil optional). Other RAL CLASSIC colours are available on request for unit casing and construction
- The black flexible skirt is made from high quality plasticised PVC polymer directly coated onto both sides of a polyester substrate
- The PVC skirt is mechanically fixed to the bottom of the casing providing directional control of discharge air through the ceiling into the occupied zone
- The TCB-RB skirt is only available in black

Technical data

- Nominal length: 1200 to 4500 mm in 100 mm increments
- Nominal width: 250, 300, 350, 400, 450, 500, 550, 600 mm
- Height: 200, 250, 300 mm

Variants

- TCB-RB-UK-0: No skirt
- TCB-RB-UK-S: with skirt fitted

This text describes the general properties of the product. Further information is available via the technical leaflet or via TROX UK.

Order code **TCB-RB**

TCB-RB – UK – 00 – S / 3000 × 450 × 200 / 2H-1-N / P4 / RAL 9005 / 20%

1 2 3 4 5 6 7 8 9 10 11 12 13

[1] Type
TCB-RB Passive chilled beam

[2] Market
UK

[3] Not used

[4] Skirt
0 No skirt
S Skirt

[5] Beam length (L_1)
1200 – 4500 (in 100mm increments)
(Note: Overall beam length L_1+100 mm)

[6] Coil width (B)
250
300
350
400
450
500
550
600

[7] Stack height (H)
200
250
300

[8] Coil rows
1V 1 row vertical connections
1H 1 row horizontal connections
2V 2 rows vertical connections
2H 2 rows horizontal connections

[9] Coil circuits
1 Single hydraulic circuit
2 Twin hydraulic circuit

[10] Coil finish
N Natural finish coil
B Black finish coil

[11] Case finish
P4 Standard finish (RAL 9005-20%)
P6 Powder coat finish (RALXXXX-XX%)

[12] Colour
For P6 only
RAL…(specify RAL colour)

[13] Gloss level
For P6 only
-…% (specify gloss level)

Variants and accessories, Dimensions and Weight

Variants

- TCB-RB-UK-0: No skirt
- TCB-RB-UK-S: with skirt fitted

Accessories

- Connecting hoses

Length	1200 to 4500 mm in 100 mm increments
Nominal width	250, 300, 350, 400, 450, 500, 550, 600 mm
Height	200, 250, 300 mm
Cooling capacity	Refer to tables
Max. operating pressure, water side	15 bar

Dimensions in mm			
L_1	B	W	H
1200	250	290	200
	300	340	250
	350	390	300
	400	440	
	450	490	
	500	540	
	550	590	
4500	600	640	

Beam Weight	
Beam Type	**Weight (kg/m)**
TCB-RB/RB-S	**15**

Note:
(coil width 500 mm)

TCB-RB dimensions

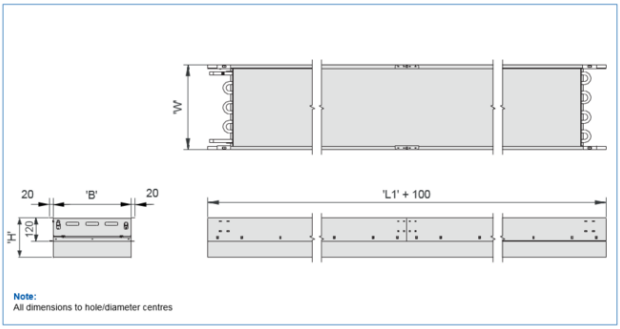

Note:
All dimensions to hole/diameter centres

Connection Options, Installation details, Basic information and nomenclature

TCB-RB dimensions and connection options (horizontal)

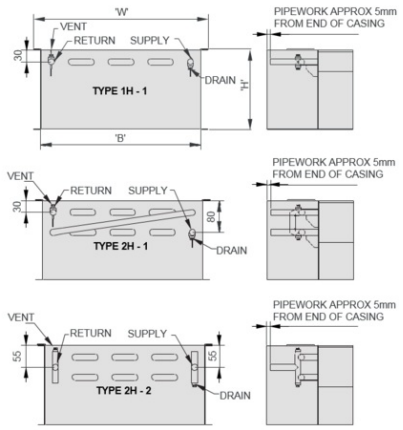

Note:
All dimensions to hole/diameter centres

TCB-RB dimensions and connection options (vertical)

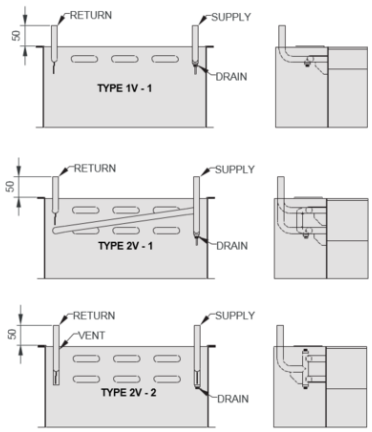

Note:
All dimensions to hole/diameter centres

Refer to installation document

Nomenclature

L_N [mm]
Nominal length

L_{WA} [dB(A)]
Sound power level

t_{Pr} [°C]
Primary air temperature

t_{WV} [C°]
Water flow temperature – cooling/heating

t_R [C°]
Room temperature

t_R [C°]
Room temperature

t_{AN} [C°]
Secondary air intake temperature

Q_{Pr} [W]
Thermal output – primary air

Q_{tot} [W]
Thermal output – total

Q_W [W]
Thermal output – water side, cooling/heating

V_{Pr} [l/s]
Primary air volume flow rate

V_{Pr} [m³/h]
Primary air volume flow rate

V_W [l/h]
Water flow rate – cooling/heating

V [l/h]
Volume flow rate

Ut_W [K]
Temperature difference – water

Up_W [kPa]
Pressure drop, water side

Up_t [Pa]
Total pressure drop, air side

$Ut_{Pr} = t_{Pr} - t_R$ [K]
Difference between primary air temperature and room temperature

$Ut_{RWV} = t_{WV} - t_R$ [K]
Difference between water flow temperature and room temperature

$Ut_{Wm\text{-}Ref}$ [K]
Difference between mean water temperature and reference temperature